ACE Group

Edible Sunflower Oil Refining Plant & Filling Facility

Description:

Refinery for refinement of the Edible Oil.

The production in the plant is continuous with one line process with the capacity of 100 - 120t per day or 30 000t per year. Using the most modern German technology of the Harburg Company Freudenberger is the guarantee for the highest quality of the product. The Refinery has the following technological facilities: Accepting and Storing of the crude oil 5000t, Storing of the refined edible oil 1000t and high storing in the storage of final product with capacity of 1200t.

Refinery:

The production in the plant of edible sunflower oil is a continuous one line process with capacity of 120 t. per day that is over 30.000 t. annually.

The refinery has capacity of production for edible sunflower oil and that is:

Sunflower oil
Corn oil
Oil rape
Soya bean oil

The refinery has the following technological facilities:

Accepting and Storing of crude (non- refined) oil of 4000 t
Storing of the refined oil of 1000 t and High vertical space in the warehouse for the final product with capacity of 1200 t.
Also in the refinery is included filling facility with capacity of filling of 6000 bottles per hour

Tank for crude oil

Crude oil is stored in the specially built tanks, built, according the ecological standards and safety standards and quality, and with capacity of 4000t oil.

Cairo Rep. Office: ACE Group
3 Samir Mokhtar St., Ard Al Golf, Cairo – Egypt
Tel: 00202 26903100/200, Fax: 00202 26903500
E-mail: info@aceindustry.net
website: www.aceindustry.net

Tank for Rafined Oil

The production in the plant is continuous with one line process with the capacity of 100t per day or 30 000t per year. Using the most modern German technology of the Harburg Company Freudenberger is the guarantee for the highest quality of the product. The Refinery has the following technological facilities: Accepting and storing of the crude oil 5000t, Storing of the refined edible oil 1000t and high storing in the storage of final product with capacity of 1000t.

Filling facility

The filling facility has a cutting edge technology that meets all standards for safety and quality. In this facility refined oil is being filled into bottles and it has a capacity of 4000 tons / hour.

Laboratory

Laboratory has a high sophisticated technology that helps in the control and achieving high technologically and ecologically safe product.

Cairo Rep. Office: ACE Group
3 Samir Mokhtar St., Ard Al Golf, Cairo – Egypt
Tel: 00202 26903100/200, Fax: 00202 26903500
E-mail: info@aceindustry.net
website: www.aceindustry.net

Quantity	Description	Manufacturer	Type / Model	YOM
1	Tank for fuel oil with thermal insulation with components: - intake station with pump and - pipeline fitting for intake of fuel oil	AgroEquipment	275м³	2009
1	Tank for sulfuric acid with components: - intake fitting, - pump, - pipe reinforcement,	UM-ING	45 T	2009
1	Polyester tank for fatty acids	Uniplast	30 T	2009
2	2 (two) tanks with components: - pipe reinforcement - intake fittings - pumps	AgroEquipment	1000 T	2010
7	7 (seven) tanks with components: - pipe reinforcement - intake fittings - pumps	Meteorit	300 T	
3	Stainless steel tanks for refined oil, insulated individually, with appropriate reinforcement, pumps, fittings, etc.	Rosfrai Madzir -	300 m³	2010
1	Oil filling machine for 5-liter bottles,			2010
1	Platform elevator, repaired, purchased from Glowon-Germany, with a cage made up of: - command console and air purification and filtration system, - transporter and platform acceptor with a joint command console with the cage and a control command panel for the entire bottle blowing machine; - Bottle blowing machine for 1 litre and 2 litres bottles (used only for 1 litre), cooler-chiller for cooling of the blowing machine tools;	SIDEL - France	FK - 1000 ZK - 1000 VLAGA - 0II	2010

Cairo Rep. Office: ACE Group
3 Samir Mokhtar St., Ard Al Golf, Cairo – Egypt
Tel: 00202 26903100/200, Fax: 00202 26903500
E-mail: info@aceindustry.net
website: www.aceindustry.net

1	Conveyor belt for transporting of empty bottles to the oil filler, with 6 (six) movers of sterile air, with a length of 45 meters, produced by Europool,	Europol France	45m.	2010
1	Daily tank for refined oil with stainless steel coating, insulated with a level regulator, ventilation valve, complete with inlet and outlet pipe reinforcement and other equipment;	Rosfrai Madzir -	5t	2009
1	Digital command cabinet for management of the conveyor belt, labelling, filling and closing of bottles, cooking oil filler with lid placement and conveyor belt leading to the labelling machine, type-model multi Fill-P, labelling machine type-model HOT matic, with conveyor belt leading to the packaging machine, with full equipment	SPS Slovenia	Fill - P HOT - Matic	2009
1	Conveyor belt going from the labelling machine to packaging machine and packaging machine, MFB-SPS type, manufacturer Slovenia, machine for forming cardboard boxes, type FKMSI, manufacturer MFB-SPS, serial number 2010-2, manufactured in 2010 with command cabinet and digital controls , machine for closing and gluing of cardboard boxes with a roller conveyor belt and digital controls, type ZAKA MST, factory number 2010-3, year of manufacturing 2010, two printers, one of which is digital, a date stamp machine for dating plastic bottles and another date stamp machine for cardboard boxes, digital type C1000 +, DOMINO, exit to the conveyor belt and other full equipment necessary for operations of the conveyor belt,	MFB SPS Slovenia	MFB FKMSI, ZAKA MST	2010
1	Packing machine for SIAT foil	SIAT - Italy	uj ualis	2010
5	Industrial heating	Rade Koncar	5kW	2009
1	Electric forklift,	FULMEN - USA	2.5t - br.93029	2002

Cairo Rep. Office: ACE Group
3 Samir Mokhtar St., Ard Al Golf, Cairo – Egypt
Tel: 00202 26903100/200, Fax: 00202 26903500
E-mail: info@aceindustry.net
website: www.aceindustry.net

1	A compressor station consisting of: - two compressors with an air dryer produced in 1995, - 2 pressure containers on a tank (manufacturer Romer Gmbh, manufactured in 2000, factory no.41852, 6 bar, manufactured in 2000), - air filters with a control panel, and - full equipment with connecting elements and fitting for air coupling, a kit for operating the system the air pressure system,	Zul Bet Uber	16 bars, туое 32, serial number.12704,	
1	Pump station for pumping cooking oil comprising of: - combined fittings (flanges, valves, manometers, etc.), for distribution of oil- in bulk; - inflow and outflow system and fittings, pumps, etc. kit	Harburg Freudenberger	20213393	2009
1	Pump station for pumping of cooking oil to the daily tank, with pumps, valves, pipeline, etc. kit.	Harburg Freudenberger	20212537	2009
1	Pallet cart, manual with hydraulic lift.	Termalift	500kgr	2003
2	Hydraulic ramp (for loading a truck)			2009
4	Water pumps; * 4 pieces of 3KW and * 1 pump of 25m3, manufactured in 2009 type, model and serial number.02/09; serial no.311C3; serial no.6309C3; serial no.6319C3 serial no.1606; 2010 year of manufacturing; * 7 valves, blue (of which 2-complete and 5 without threaded spindle) and * 1-large valve blind.	MZT	KHVP20P/2m	2009

Cairo Rep. Office: ACE Group
3 Samir Mokhtar St., Ard Al Golf, Cairo – Egypt
Tel: 00202 26903100/200, Fax: 00202 26903500
E-mail: info@aceindustry.net
website: www.aceindustry.net

1	Pump station for raw oil containing: - two large and two small raw oil pumps; - two filters; - two sludge tanks with complete fittings and valve drain distributor; - flanges and other fitting equipment; - special pump for fatty acids, and - command cabinet	Germany	ebsd050200cbafslb	2009
1	Underground oil tank, with receiving shaft, pipeline and fittings for the reception and distribution of oil to the boilers	Dimce-banjarot	30t	2005
1	Steam boiler VITOMAX 200 with burner WIISHAUPL automatic, controlled boiler room; measuring of pressure with an electronic control cabinet, with expansion containers; distributors, with GRUNTCS pumps, tank condenser 0083 type R 580 manufactured in 2009 tools for effective use	VITOMAX 200	R 580	2009
1	Hot water boiler with full equipment for full operation, measuring devices, safety devices, auxiliary equipment, etc.	TERMOSTAL	EN500	2009
1	Vacuum steam boiler with electronic command cabinet and complete safety, measuring, auxiliary and other equipment for proper operations.	HTI-GESARO	serial number: 70/81000308	2008
1	Mixer and filler of mixed fluid in the piping system against rusting of the pipes, along with full equipment, auxiliary containers, pipelines and other necessary fittings	Rosfrai Madzir -	CIP 1m³	2009
1	Daily oil tank with complete fittings and full pipe reinforcement, and other equipment for inflow and outflow of oil.	Dimce-banjarot	3 m³	2009

1	Water tank for cooling towers with a pump station with two pumps (pump manufacturer – MZT Skopje); with waste collector, full auxiliary equipment, pipelines, measuring instruments and other equipment necessary for line operations.	Meteorit	PTB - 01 PTB -02 PHB -01	2009
1	Cooling towers - two, with full inflow and outflow pipe installations, measuring instruments, fittings and other equipment necessary for the functioning of the cooling towers.	EVAPCO	AT - 18-79 AT - 18-49splash	2008
1	Electronic vacuum system (no.70/81000306; manufacturing year 2009; identification no.20210062) with a complete line for continuous operation.	Körting Hannover	vacum pump 20210062	2009
1	Water tank with a square shape and complete inflow and outflow installation,	Meteorit	RT 02 RHV 02	2009
1	Soil filtration dosing system, (factory no.7081000306; year of manufacturing 2009, the system has a square shape and a green colour; identification no.20115174), comprising of: - receiving funnel (stainless steel) for caustic soda; - 1 receiving funnel for phosphoric acid, - drainage elements necessary for continuous operations of the system.	HAMBURG	150 2 jacob	2009
1	Dosing system (factory no.7081000306; identification no.20115174)	HAMBURG	d 150	2009
1	Tank-buffer, (factory no.0098 type R590); along with all necessary elements for its continuous operations in the system (pump, pipe elements, fittings etc.)	Dimce-banjarot	R 590	2009
2	Vertical filter for filtering oil with a unit for washing of the sieves from the filters with basins and accompanying elements and equipment for continuous operations of the line. the same filters are for bleaching.	Germany	1000-22/1500	2009

Cairo Rep. Office: ACE Group
3 Samir Mokhtar St., Ard Al Golf, Cairo – Egypt
Tel: 00202 26903100/200, Fax: 00202 26903500
E-mail: info@aceindustry.net
website: www.aceindustry.net

1	Degasser (soft water preparation system) with suitable steam boiler couplings; distributor with full fittings and other equipment necessary for continuous operations.	Meteorit	DE -5	2009
1	System kit for preparation and softening for soft water - ioniser consisting of: * 3-metal tanks, * 2-plastic tanks * 5-purifiers; blue; and a set of connectors * pipe elements for continuous operations of the line.	Meteorit	JOH -7	2010
2	Stainless steel tank for CIP system (incomplete, and one water pump - MZT Skopje - not connected).	Rosfrai Madzir -	1000lit.	2009
6	Oil filter with full reinforcement, valves, connectors, measuring and safety elements and other equipment for continuous operations of the line.	Germany	afb-180t2f	2009
1	Horizontal filter for oil filtering with full reinforcement, filters, valves with pneumatic openings with a drainage basin for the used filtering fluid, and other equipment necessary for continuous operations of the process.	Germany	1000-22/1500	2009
1	Separating line consisting of: - two separators, - two heat exchangers, - a control panel, - a rinsing basin, - a crane path and a small crane, - a complete pipe reinforcements, pipes, measuring and safety instruments and fittings, and - other equipment necessary for continuous operations of the line	Germany	d348 150/200	2009
1	Tank - insulated (with no.4107 coupled with two vertical cylinders with no.41101 and 41102, complete reinforcement, fittings, barometers and connectors and other equipment	Meteorit	41101	2010

Cairo Rep. Office: ACE Group
3 Samir Mokhtar St., Ard Al Golf, Cairo – Egypt
Tel: 00202 26903100/200, Fax: 00202 26903500
E-mail: info@aceindustry.net
website: www.aceindustry.net

	necessary for operation of the line).			
1	Oil purification system consisting of: - a heat exchanger, - a heat container for phosphoric acid with no.42752 - electric motor pump with reinforcement and fittings with 1 large electric motor pump and one small electric motor pump; - a set of measuring instruments; - insulated enclosed container-mixer with no.4278; - two heat exchangers; and full reinforcement and fittings; - plastic container for caustic soda with no.4281.2; - small electric motor pump and complete measuring and control instruments;	Germany	70-81000306	2010
1	Container for mixing and preparation of raw oil with filtering agent with built-in electric motor (SKRUBER) connected to a pump and a tank with a bleaching agent from the upper floor and other necessary equipment for continuous operation of the line,	Germany	ekatofd60 4950	
1	Wax extraction container - crystallizer with no.4908.1 with a built-in electric motor - mixer; with necessary flanges, pipes, fittings, pipe elements and other necessary equipment.	Germany	ekatofd60	2009
1	Oil nitriding system comprising of: - heat exchanger; - control measuring instruments, valves, etc. necessary pipe reinforcements, for continuous operation of the line.	Germany	N-06	2009

1	A system for preparation of a caustic soda agent and sulfuric acid agent and the dosing of the agent during the process of production, comprising of: - a receiving rubberised tank; - a mid-sized chrome plated tank and a chrome plated caustic soda tank, - the system includes an insulated tank for fatty acids waste, manufacturer Dimche Banjarot from Prilep factory no.0097; 3m3 R595 type model; manufactured in 2009 and - complete auxiliary equipment for continuous operation of the line	Dimce-banjarot	R 595	2009
2	Vertical tank (container) for initial purification of raw oil (not in use is, not connected to a sediment basin)	Meteorit	10m³	2009
1	Daily tank for technical water No. RTV-03 no.4819, along with an electric motor pump complete with pipelines, valves, connectors and other fittings. (connected with upper floor) same tank	Dimce-banjarot	RTV-03	2009
1	Electric motor pump with receiving pipes and valves from the upper square tank; distributor with six branches of drainage to the necessary technical lines with the necessary pipelines and fittings and equipment	MZT	P-12	2009
1	Distributor insulated (factory no.0122; type R69), with five output valves; barometer; and other necessary fittings and pipes and equipment;	Dimce-banjarot	DVT-2	2009
1	Tank container - deodorizer insulated, vertical (identification no.20115070, factory no.7575) comprising of 4 glass openings for control with distributor, manometer, valves, flanges, and other reinforcements and fittings with factory no.0123 type; pressure 12 bar, vapour; with oil distributor no.4806 identification no.20211747; chrome plated with full reinforcement and fittings; attached control container - tank identification no. 20115037; factory no.4803; with 10 bar. and full	Germany	DVT 1	2009

Cairo Rep. Office: ACE Group
3 Samir Mokhtar St., Ard Al Golf, Cairo – Egypt
Tel: 00202 26903100/200, Fax: 00202 26903500
E-mail: info@aceindustry.net
website: www.aceindustry.net

	accompanying equipment for operation of the line.			
1	Control room with 8 - electrical control cabinets with 3 - electrical control panels; with computer controls and managing of operation, with 3 hardware units (computers) and 5 monitoring screens; with automatic managing; managing the production process along with a software solution. and control of the operations of the refinery, so called SCADA system.	Germany	20213839	2009
	LABORATORY			
1	Extensograph Machine (factory no.996010) with: - electronic scale SARTORIUS (type BL1500; - set of water basins 2 pieces; type 150E, manufacturer BRABENPER; with factory no. T150E KIE 91204320245) - Machine for testing flour strength - Farinograph (type 827504 no.992030); - flour measuring device - scale, small - amylograph- device for testing flour hardness (type 80145010 no.990022); -mini mill (type 8801001 factory no.888042); (bakery section and mill section of the laboratory)).	BRABENDER	тип 860002,	2000
1	Centrifuge with: Water bath, (factory no. 1310.0690). spectrophotometer; (type JENWAY 6305; model 6305 factory no.20296); - analytical scale (type AJR2200E) - steriliser mememert; silver; - oven NABERTHERM (model L5/11 /V180 /no.213689); (part of the laboratory is used for the oil factory). - Centrifuge type EBA (2002, factory no.0102787: 2010 year of manufacturing). Laboratory tables and all glass and other elements and containers needed	MEMERT	WNB-10	2010

	for continuous laboratory testing.			
1	Chrome plated tank for phosphoric acid with stirrer no.4275.1 with a dosing pump and other accompanying equipment, pipelines etc., necessary for continuous operation of the line.	Germany	d 150	2009
1	Caustic soda tank (no.4281.1 with pump and pipe divider and a small auxiliary tank; chrome plated, set with the necessary equipment for continuous operation of the technological process).	Germany	4281.1	2009
1	Water tank - pressure vessel, (factory number 0113-1, reinforcement connector and fitting and other accompanying elements for the continuous operation of the process);	Dimce-banjarot	H-50,	2009
2	Buffer tank - insulated, (number 4950.1, with pump and measuring instruments and pipe reinforcement and fittings, number of the other tank 4100, full equipment and fittings for continuous operation of the production process).	Dimce-banjarot	R594	2010
1	Tank - mixer with a built in electric motor - reducer, number 4105, pipe reinforcement and a set of measuring equipment, factory number 0096, type R594, manufactured in 2009, with connective reinforcement of the two tanks (no. 58), and complete auxiliary, measuring and safety equipment and fitting.	Dimce-banjarot	R594	2009
2	Low pressure compressor along with a tank for pressurised air mounted externally, pipe reinforcement with full equipment;	MATTCI;	AC22L	2005
1	air dryer type MD 49	MATTCI;		2005

Cairo Rep. Office: ACE Group
3 Samir Mokhtar St., Ard Al Golf, Cairo – Egypt
Tel: 00202 26903100/200, Fax: 00202 26903500
E-mail: info@aceindustry.net
website: www.aceindustry.net

1	Polyester tank for demineralized water, (with complete connective equipment, necessary auxiliary equipment and other fittings for continuous operation of the line),	Uniplast	13m³	2009
1	Water distributor - collection tank for urban and well water,	Meteorit	T-3	2009
1	Buffer – intermediate tank (no.4800, factory no. 0079), with pipeline installation fittings, pump and full equipment with manometer and other auxiliary equipment.	Dimce-banjarot	4800	2009
1	Expansion container with manometer, couplings, fittings and other equipment necessary for continuous operation of the process.	Meteorit	E-24	2009
1	System for dosing and mixing of oil (with an electric motor with identification no. 2021270), chrome plated with all measuring instruments, connective elements and other necessary equipment for continuous operation of the line.	Rosfrai Madzir -	2021270	2009
1	Power supply system for deodorizer (with electric motor with identification no. 20212705, heat exchanger with identification no. 20212079, dosing pumps and full additional equipment necessary for continuous operation of the line),	Germany	levelpipe	2009
1	Cold water chiller (with complete pipe equipment for inflow and outflow, manufacturer TRANE, serial no. EKS 1178, no. 0038, type RTUS212, with heat exchanger and full equipment for continuous operation of the line).	TRANE	RTUS 212	2009
1	A line for preparation of fatty acid (with different dimensions, total of 5 pieces, i.e. 5 tanks, manufacturer: poliester PRIBOJ , with assortment of pipes, pumps, valves and other connective elements necessary for continuous process execution, remote controlled).	POLIESTER PRIBOOJ Serbia	MK-5	2009

2	Chrome plated tank for cooling liquid antifreeze-alcohol, with appropriate coupling elements, pump and other equipment for continuous process progress, insulated,	Meteorit	RTB -02	2009
2	Crystallizer tank (with no.4908.2 and 4908.3, complete with pipeline systems and pumps (from domestic production) with all connective, safety and other elements for continuous operation of the process	Germany	ekatofd60	2009
1	Mixing tank - chrome plated (no.4284, complete with a barometer and full complete pipe reinforcement, with a pipe heat exchanger c-m pipe in pipe).	Rosfrai Madzir -	4284	2009
1	Intermediate tank with heat insulation with pump, pipes, necessary fitting, with two pumps no.4270, manufacturer D.Banjarot - Prilep, full equipment for continuous execution of the working process	Dimce-banjarot	4270	2010
1	System of tanks for oil purification and storage, comprising of: - 4 vertical tanks, - 1 horizontal tank (with numbers: the first R597, factory number 0100, second with number 4294.1, third with number 4913.1, coated type R593; factory number 0094, fourth with number 4115, type 589, insulated, horizontal insulated tank) - total of 5 pumps and one mud pump, with full fittings, valves and other and full pipeline system and equipment for continuous operation of the production process	Dimce-banjarot	R 597 - 2 pieces R 593 589	2009

Cairo Rep. Office: ACE Group
3 Samir Mokhtar St., Ard Al Golf, Cairo – Egypt
Tel: 00202 26903100/200, Fax: 00202 26903500
E-mail: info@aceindustry.net
website: www.aceindustry.net

Cairo Rep. Office: ACE Group
3 Samir Mokhtar St., Ard Al Golf, Cairo – Egypt
Tel: 00202 26903100/200, Fax: 00202 26903500
E-mail: info@aceindustry.net
website: www.aceindustry.net

Cairo Rep. Office: ACE Group
3 Samir Mokhtar St., Ard Al Golf, Cairo – Egypt
Tel: 00202 26903100/200, Fax: 00202 26903500
E-mail: info@aceindustry.net
website: www.aceindustry.net

Cairo Rep. Office: ACE Group
3 Samir Mokhtar St., Ard Al Golf, Cairo – Egypt
Tel: 00202 26903100/200, Fax: 00202 26903500
E-mail: info@aceindustry.net
website: www.aceindustry.net

Cairo Rep. Office: ACE Group
3 Samir Mokhtar St., Ard Al Golf, Cairo – Egypt
Tel: 00202 26903100/200, Fax: 00202 26903500
E-mail: info@aceindustry.net
website: www.aceindustry.net

Cairo Rep. Office: ACE Group
3 Samir Mokhtar St., Ard Al Golf, Cairo – Egypt
Tel: 00202 26903100/200, Fax: 00202 26903500
E-mail: info@aceindustry.net
website: www.aceindustry.net

Cairo Rep. Office: ACE Group
3 Samir Mokhtar St., Ard Al Golf, Cairo – Egypt
Tel: 00202 26903100/200, Fax: 00202 26903500
E-mail: info@aceindustry.net
website: www.aceindustry.net

Cairo Rep. Office: ACE Group
3 Samir Mokhtar St., Ard Al Golf, Cairo – Egypt
Tel: 00202 26903100/200, Fax: 00202 26903500
E-mail: info@aceindustry.net
website: www.aceindustry.net

Cairo Rep. Office: ACE Group
3 Samir Mokhtar St., Ard Al Golf, Cairo – Egypt
Tel: 00202 26903100/200, Fax: 00202 26903500
E-mail: info@aceindustry.net
website: www.aceindustry.net

Cairo Rep. Office: ACE Group
3 Samir Mokhtar St., Ard Al Golf, Cairo – Egypt
Tel: 00202 26903100/200, Fax: 00202 26903500
E-mail: info@aceindustry.net
website: www.aceindustry.net

Cairo Rep. Office: ACE Group
3 Samir Mokhtar St., Ard Al Golf, Cairo – Egypt
Tel: 00202 26903100/200, Fax: 00202 26903500
E-mail: info@aceindustry.net
website: www.aceindustry.net

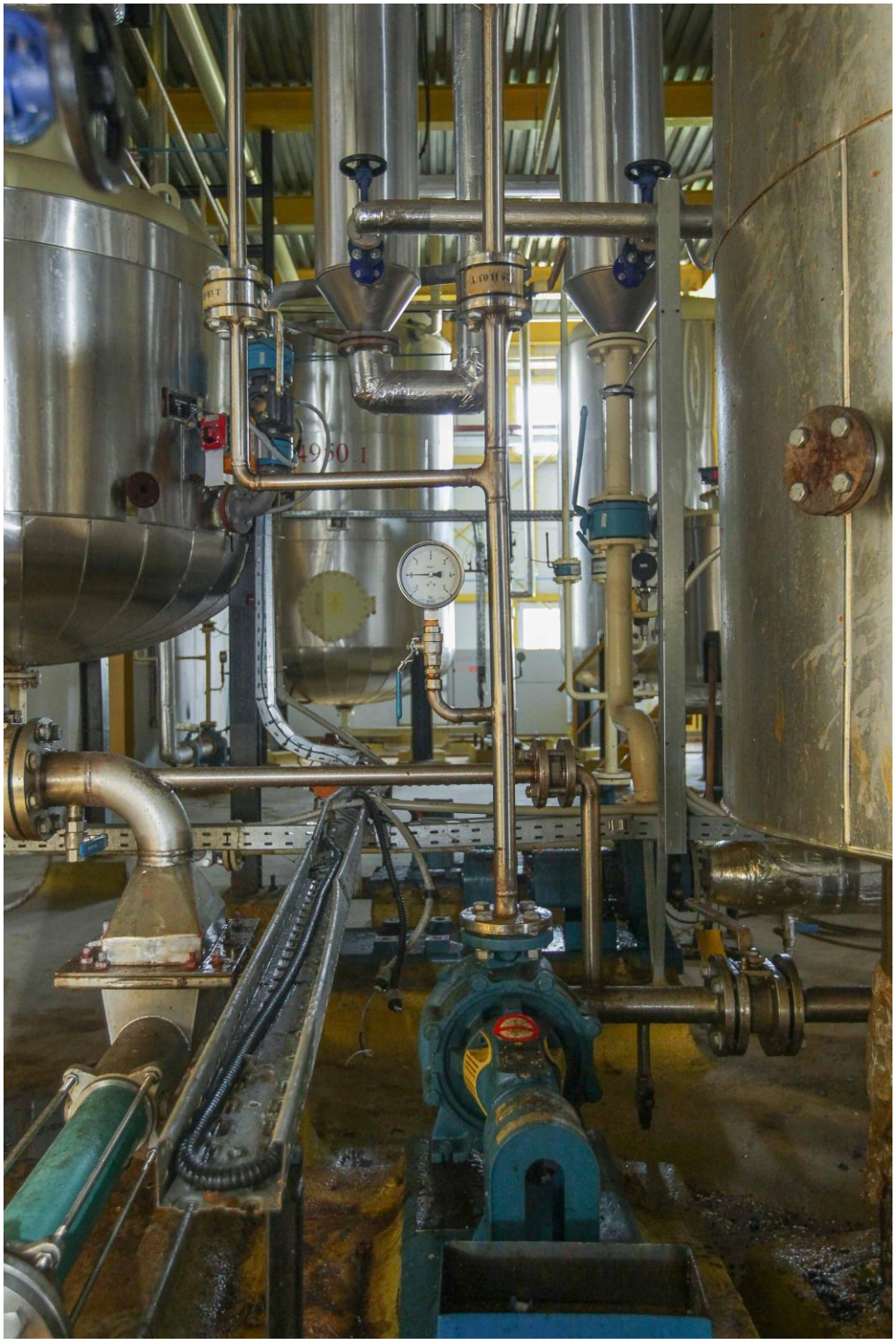

Cairo Rep. Office: ACE Group
3 Samir Mokhtar St., Ard Al Golf, Cairo – Egypt
Tel: 00202 26903100/200, Fax: 00202 26903500
E-mail: info@aceindustry.net
website: www.aceindustry.net

Cairo Rep. Office: ACE Group
3 Samir Mokhtar St., Ard Al Golf, Cairo – Egypt
Tel: 00202 26903100/200, Fax: 00202 26903500
E-mail: info@aceindustry.net
website: www.aceindustry.net

Cairo Rep. Office: ACE Group
3 Samir Mokhtar St., Ard Al Golf, Cairo – Egypt
Tel: 00202 26903100/200, Fax: 00202 26903500
E-mail: info@aceindustry.net
website: www.aceindustry.net

Cairo Rep. Office: ACE Group
3 Samir Mokhtar St., Ard Al Golf, Cairo – Egypt
Tel: 00202 26903100/200, Fax: 00202 26903500
E-mail: info@aceindustry.net
website: www.aceindustry.net

Cairo Rep. Office: ACE Group
3 Samir Mokhtar St., Ard Al Golf, Cairo – Egypt
Tel: 00202 26903100/200, Fax: 00202 26903500
E-mail: info@aceindustry.net
website: www.aceindustry.net

Cairo Rep. Office: ACE Group
3 Samir Mokhtar St., Ard Al Golf, Cairo – Egypt
Tel: 00202 26903100/200, Fax: 00202 26903500
E-mail: info@aceindustry.net
website: www.aceindustry.net

Cairo Rep. Office: ACE Group
3 Samir Mokhtar St., Ard Al Golf, Cairo – Egypt
Tel: 00202 26903100/200, Fax: 00202 26903500
E-mail: info@aceindustry.net
website: www.aceindustry.net

Cairo Rep. Office: ACE Group
3 Samir Mokhtar St., Ard Al Golf, Cairo – Egypt
Tel: 00202 26903100/200, Fax: 00202 26903500
E-mail: info@aceindustry.net
website: www.aceindustry.net

Cairo Rep. Office: ACE Group
3 Samir Mokhtar St., Ard Al Golf, Cairo – Egypt
Tel: 00202 26903100/200, Fax: 00202 26903500
E-mail: info@aceindustry.net
website: www.aceindustry.net

Cairo Rep. Office: ACE Group
3 Samir Mokhtar St., Ard Al Golf, Cairo – Egypt
Tel: 00202 26903100/200, Fax: 00202 26903500
E-mail: info@aceindustry.net
website: www.aceindustry.net

Cairo Rep. Office: ACE Group
3 Samir Mokhtar St., Ard Al Golf, Cairo – Egypt
Tel: 00202 26903100/200, Fax: 00202 26903500
E-mail: info@aceindustry.net
website: www.aceindustry.net

Cairo Rep. Office: ACE Group
3 Samir Mokhtar St., Ard Al Golf, Cairo – Egypt
Tel: 00202 26903100/200, Fax: 00202 26903500
E-mail: info@aceindustry.net
website: www.aceindustry.net

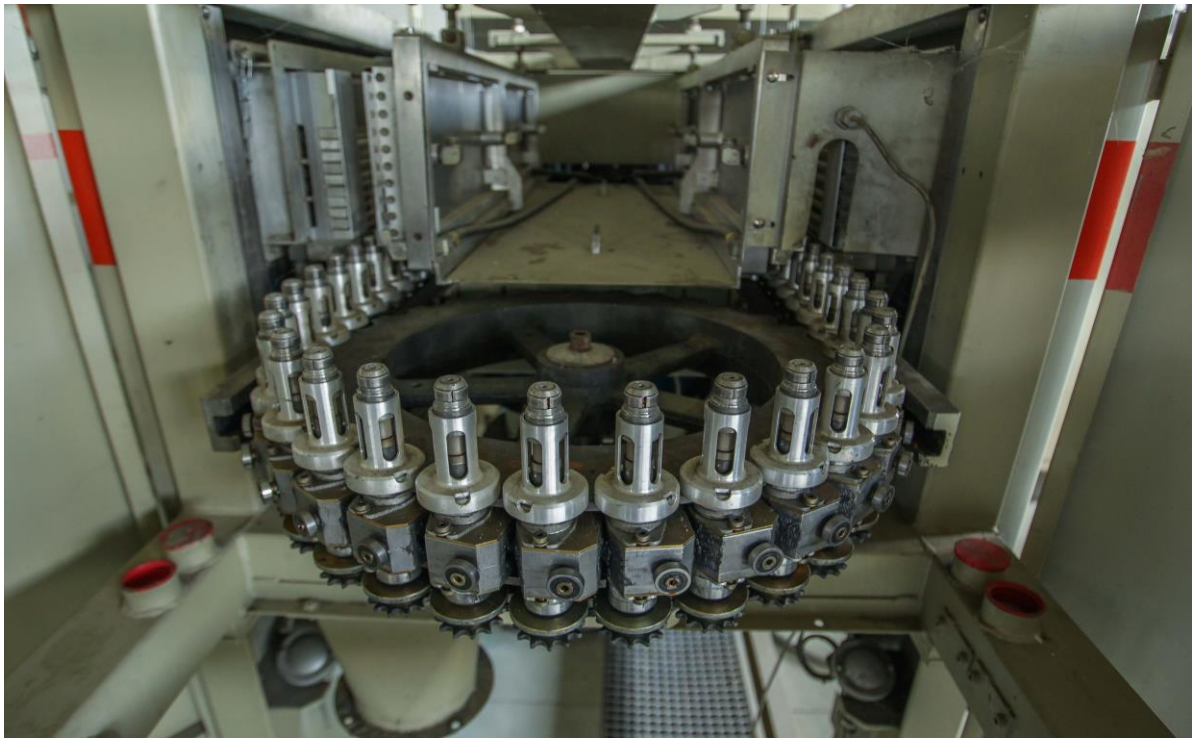

Cairo Rep. Office: ACE Group
3 Samir Mokhtar St., Ard Al Golf, Cairo – Egypt
Tel: 00202 26903100/200, Fax: 00202 26903500
E-mail: info@aceindustry.net
website: www.aceindustry.net

Cairo Rep. Office: ACE Group
3 Samir Mokhtar St., Ard Al Golf, Cairo – Egypt
Tel: 00202 26903100/200, Fax: 00202 26903500
E-mail: info@aceindustry.net
website: www.aceindustry.net

Cairo Rep. Office: ACE Group
3 Samir Mokhtar St., Ard Al Golf, Cairo – Egypt
Tel: 00202 26903100/200, Fax: 00202 26903500
E-mail: info@aceindustry.net
website: www.aceindustry.net

Cairo Rep. Office: ACE Group
3 Samir Mokhtar St., Ard Al Golf, Cairo – Egypt
Tel: 00202 26903100/200, Fax: 00202 26903500
E-mail: info@aceindustry.net
website: www.aceindustry.net

Cairo Rep. Office: ACE Group
3 Samir Mokhtar St., Ard Al Golf, Cairo – Egypt
Tel: 00202 26903100/200, Fax: 00202 26903500
E-mail: info@aceindustry.net
website: www.aceindustry.net

Cairo Rep. Office: ACE Group
3 Samir Mokhtar St., Ard Al Golf, Cairo – Egypt
Tel: 00202 26903100/200, Fax: 00202 26903500
E-mail: info@aceindustry.net
website: www.aceindustry.net

Cairo Rep. Office: ACE Group
3 Samir Mokhtar St., Ard Al Golf, Cairo – Egypt
Tel: 00202 26903100/200, Fax: 00202 26903500
E-mail: info@aceindustry.net
website: www.aceindustry.net

Cairo Rep. Office: ACE Group
3 Samir Mokhtar St., Ard Al Golf, Cairo – Egypt
Tel: 00202 26903100/200, Fax: 00202 26903500
E-mail: info@aceindustry.net
website: www.aceindustry.net

Cairo Rep. Office: ACE Group
3 Samir Mokhtar St., Ard Al Golf, Cairo – Egypt
Tel: 00202 26903100/200, Fax: 00202 26903500
E-mail: info@aceindustry.net
website: www.aceindustry.net

Cairo Rep. Office: ACE Group
3 Samir Mokhtar St., Ard Al Golf, Cairo – Egypt
Tel: 00202 26903100/200, Fax: 00202 26903500
E-mail: info@aceindustry.net
website: www.aceindustry.net

Cairo Rep. Office: ACE Group
3 Samir Mokhtar St., Ard Al Golf, Cairo – Egypt
Tel: 00202 26903100/200, Fax: 00202 26903500
E-mail: info@aceindustry.net
website: www.aceindustry.net

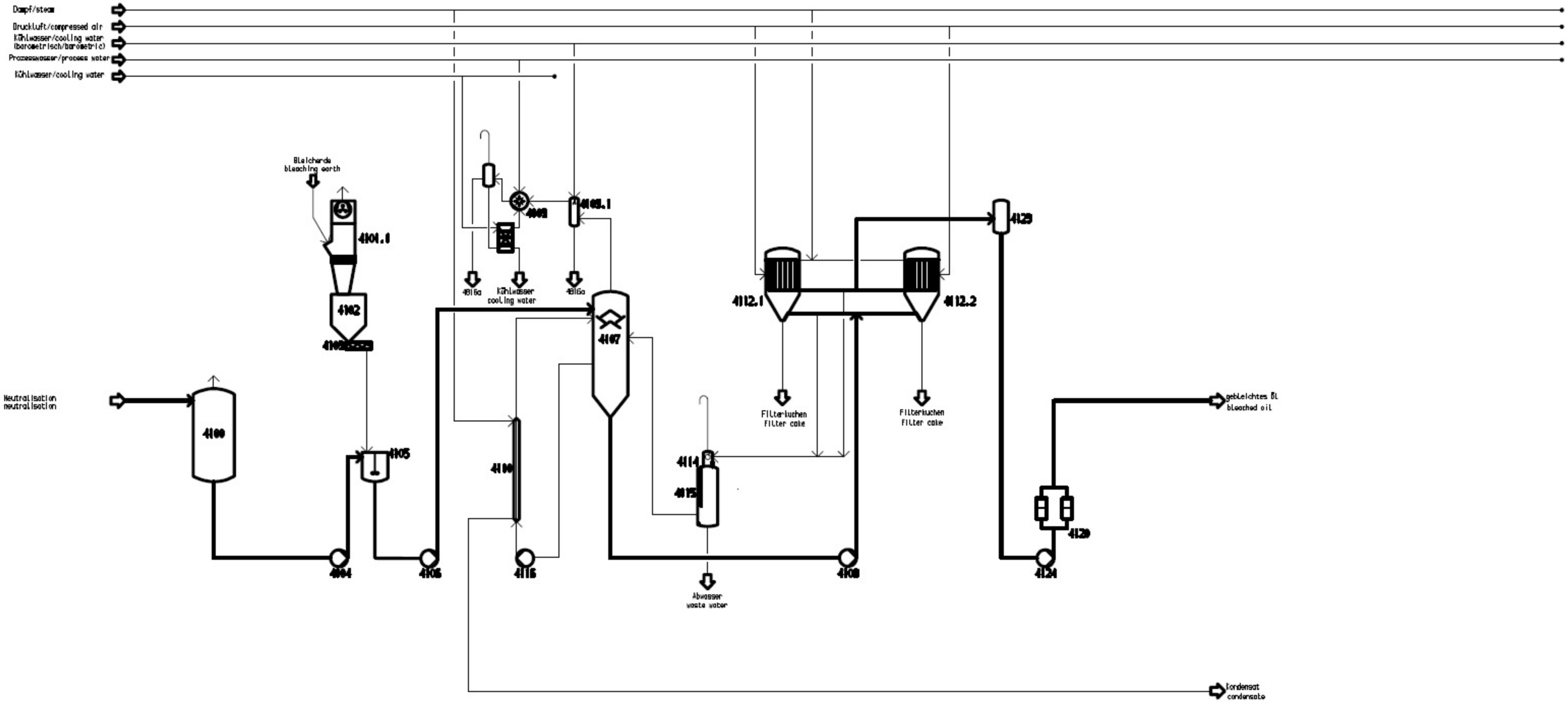
Dampf/steam
Druckluft/compressed air
Kühlwasser/cooling water (barometrisch/barometric)
Prozesswasser/process water
Kühlwasser/cooling water
Bleicherde
bleaching earth
4101.1
4102
4102.1
4116a
Kühlwasser
cooling water
4116a
4105.1
4107
4112.1
4112.2
4129
Filterkuchen
filter cake
Filterkuchen
filter cake
Neutralisation
neutralisation
4100
4104
4105
4106
4109
4116
4114
4115
Abwasser
waste water
4108
4120
4124
gebleichtes Öl
bleached oil
Kondensat
condensate

Dampf
steam
Kühlwasser
cooling water
Kühlwasser (barometrisch)
cooling water(barometric)
Kaltwasser
chilled water

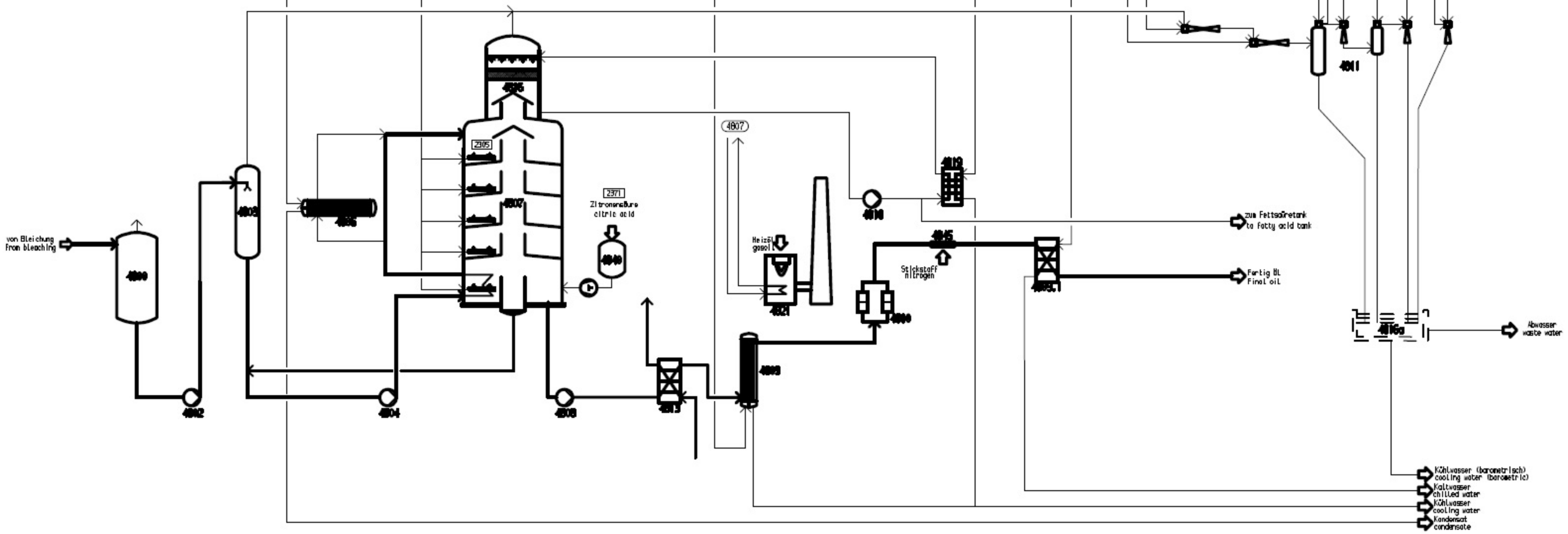

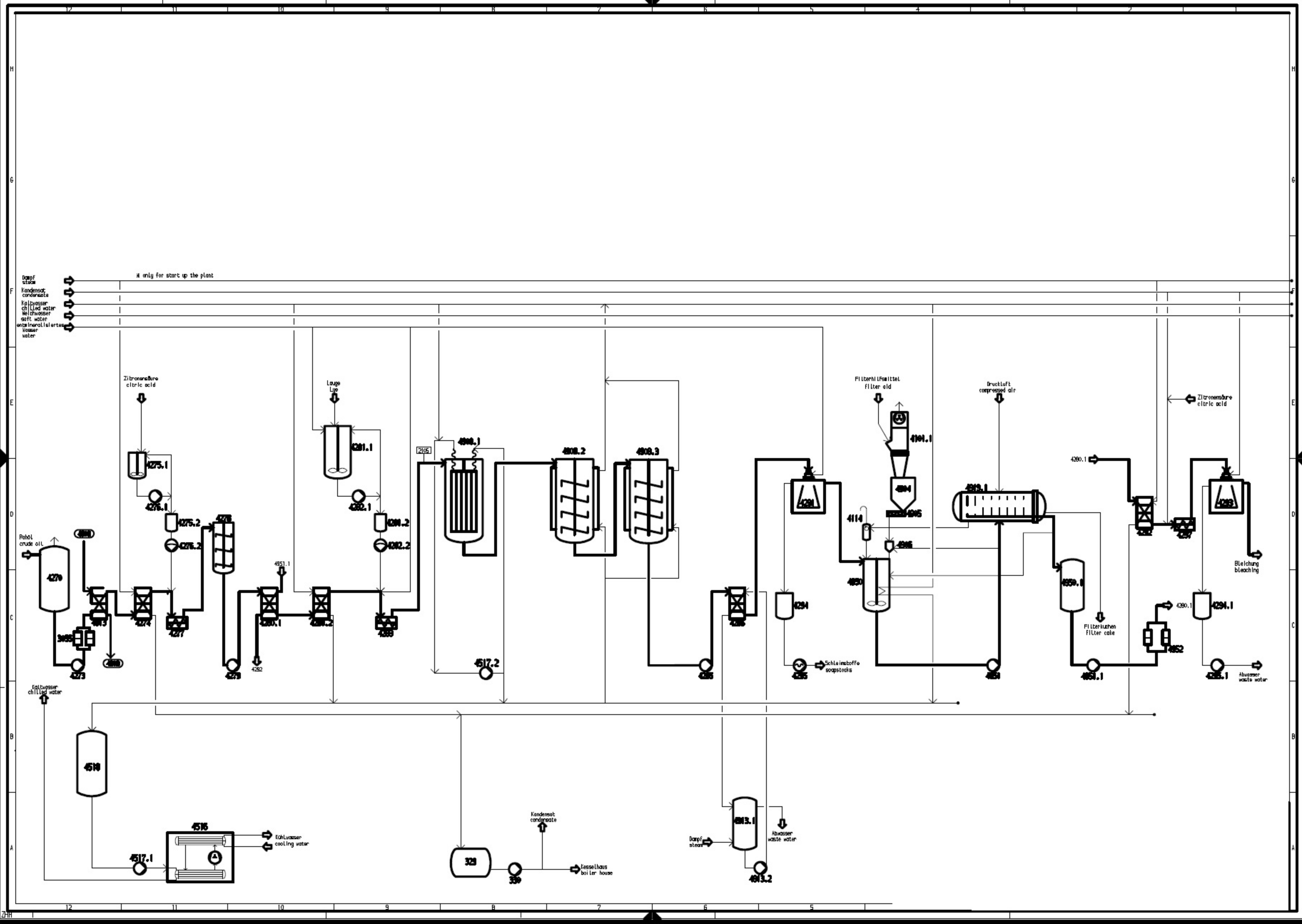

Dampf steam
Kondensat condensate
Kaltwasser chilled water
Weichwasser soft water
entmineralisiertes Wasser water
* only for start up the plant
Zitronensäure citric acid
Lauge Lye
Filterhilfsmittel filter aid
Druckluft compressed air
Zitronensäure citric acid
Rohöl crude oil
Kaltwasser chilled water
Kühlwasser cooling water
Kondensat condensate
Kesselhaus boiler house
Dampf steam
Abwasser waste water
Schleimstoffe soapstocks
Filterkuchen filter cake
Bleichung bleaching
Abwasser waste water
4270
4275.1
4276.1
4275.2
4276.2
4276
4281.1
4282.1
4281.2
4282.2
4951.1
4280.1
4280.2
4283
4292
4273
4274
4277
4279
4517.2
4908.1
4908.2
4908.3
4294
4295
4101.1
4904
4905
4906
4114
4950
4919.1
4950.1
4951.1
4952
4280.1
4294.1
4295.1
4280.1
4293
4297
4510
4516
4517.1
329
330
4913.1
4913.2